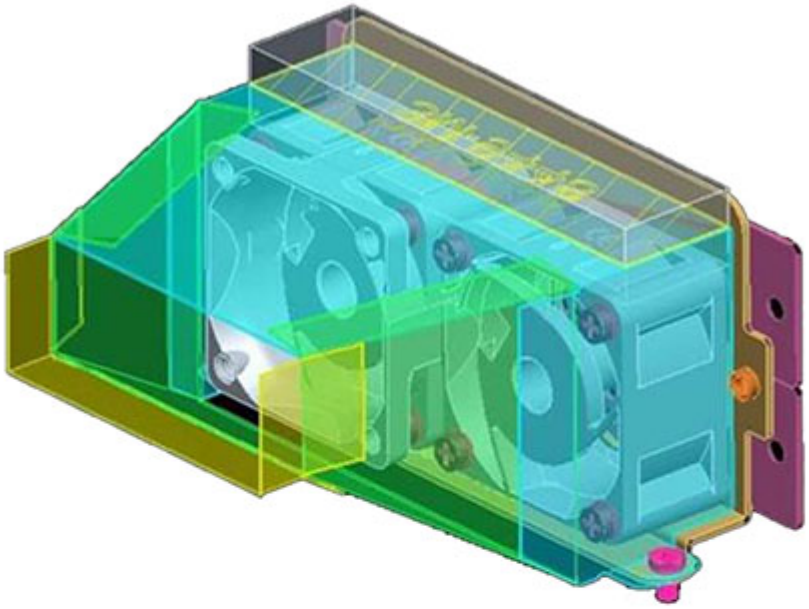

69.95 EUR
incl. 19% VAT, plus shipping

- MX1D-02INFAN-TP4

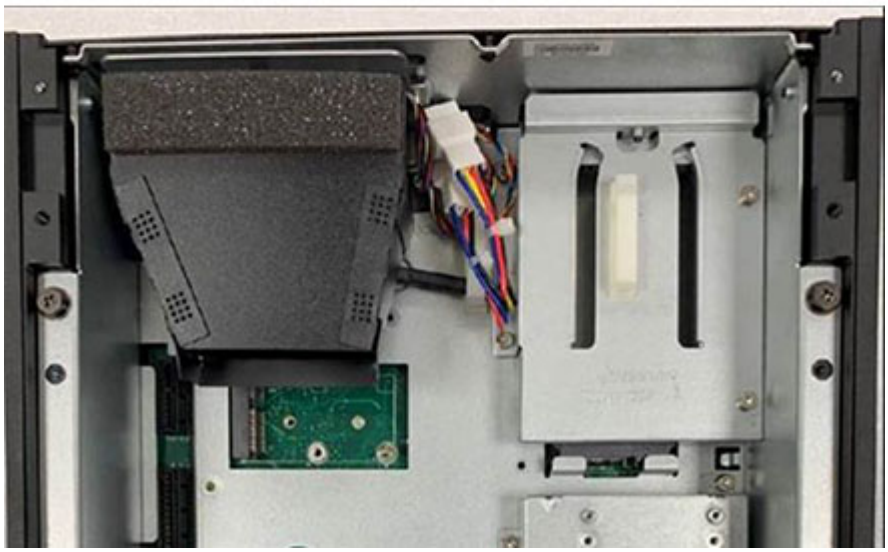

- Internal Fan solution w/ cables
  (2 pcs 40x40x28mm fan, P/N: 336210000083 in one set)
- Fan Duct x 1 PCS
- Venting Door x 2 PCS
- 4020 Fan Screws
- Single Packing